AS HANGING DISPLAY SYSTEMS

APPLICATION GUIDE

WALL TRACK END-CAP
B1030

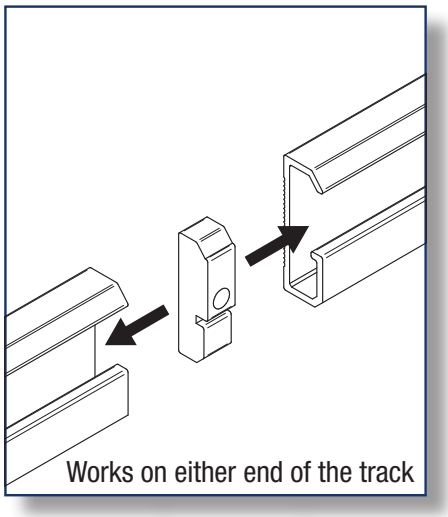

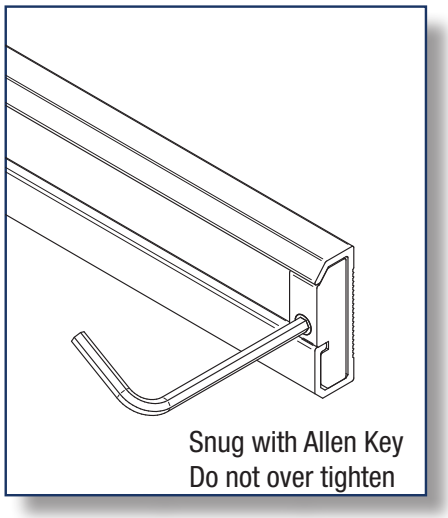

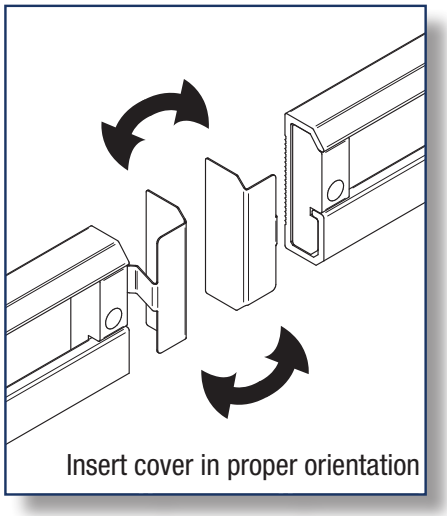

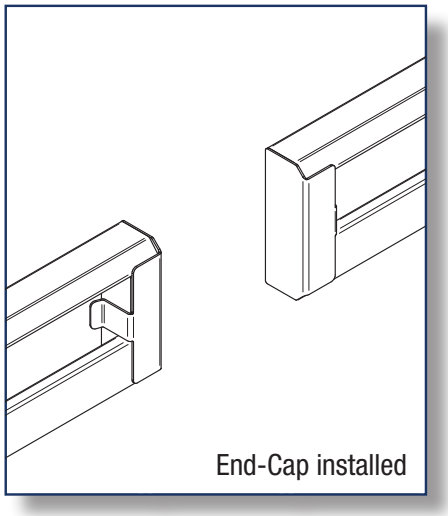

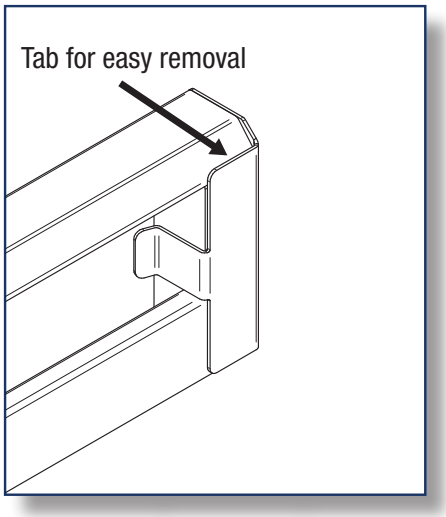

ASHanging.com
866.935.6949

© 2017 AS Hanging Display Systems
All rights reserved
H5062